B1801

Gorg Borg Olivier Str. Victoria, Gozo
x.treme@onvol.net 21553611

Features

Energy Efficiency Class: A+
Energy Consumption: 120kWh/year
Net Capacity: 128Liters
Noise Level: 39dB(A)
3 Safety Glass Shelves
Static Cooling System
Mechanical Control System
Reversible Door

Dimensions

Height: 86cm
Width: 54cm
Depth: 54.8cm

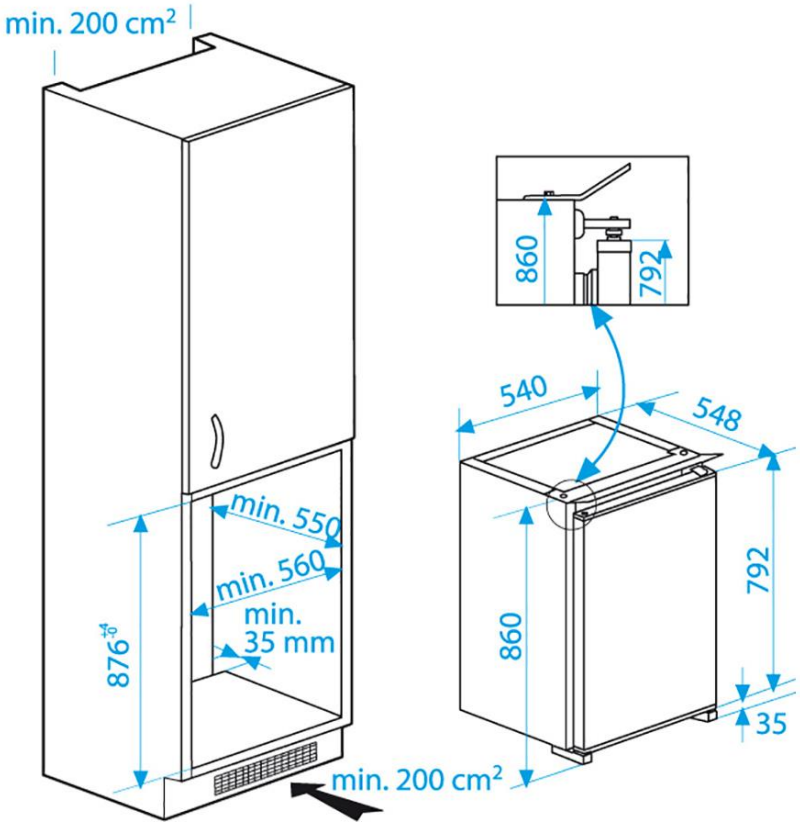

5 YEARS PARTS & LABOUR WARRANTY